AVAND HKL 970 SC

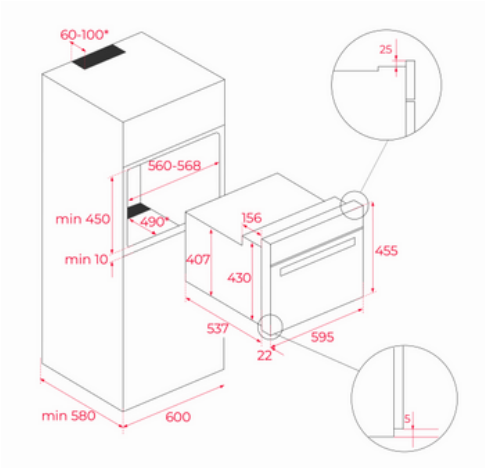

TEKA

Combi steamer
Energy class: A+
Fingerprint proof stainless steel
Capacity : 30 litres
5 cooking functions
23 access menus
3 memories
1600 W turbo function
Steam function temperatures : 40º-80º-100º
Digital display
Pop-up control knobs
Meat probe device
1200 W grill
1.4 water tank
4 cooking levels
Forced ventilation
Stainless steel cavity
Children safety block
Triple glazed door
2 stainless steel trays
1 stainless steel grid

External Dimension
- H 455 mm
- W 595 mm
- D 542 mm

— TENDER AND JUICY INSIDE, CRISPY AND GOLDEN OUTSIDE —

Thanks to the steam oven Advand HKL 970 SC, you can not only steam but also roast or even better, steam and roast your meals. By using the new cooking function which combines hot air with steam, you can prepare delicious roasts which are tender and juicy inside and crispy outside.