smeg

Classica Aesthetic
PGF64-4

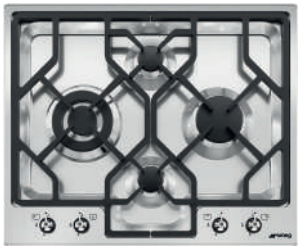

Gas Hob
60 cm
Stainless steel Colour
Satin Finishing
Brushed Steel
4 Control Knobs
Lateral Control knob position
Cast Iron Grids
Ultra-low profile Built-in type
1st zone type: Gas - UR
2nd zone type: Gas - AUX
3rd zone type: Gas - AUX
4th zone tipe: Gas - Rapid
1st zone power: 3.90 kW
2nd zone power: 1.05 kW
3rd zone power: 1.05 kW
4th zone power: 2.50 kW

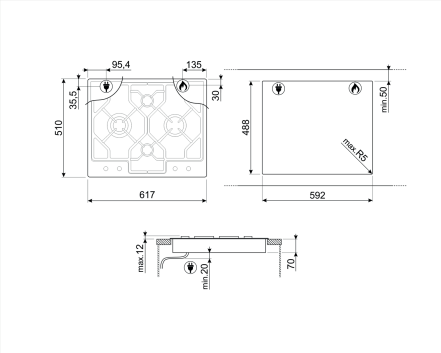

External Dimensions
H 510 mm
W 617 mm
D 82 mm