smeg

Linea
SF4101MN1

Combi Microwave Oven Linea Aesthetics
Cooking Method: Microwave with grill
Power supply: Electric
No. of cooking functions: 4
Display name: CompactScreen
Display technology: LCD
Temperature control: Electronic
Minimum Temperature: 50 °C
Maximum temperature: 250 °C
Cavity material: Easy clean enamel
Microwave effective power: 1000 W
Door opening type: Standard opening
Door: Temperate door
Cooling system: Tangential
Microwave screen protection: Yes
Microwave stops when door is opened: Yes
Heating suspended when door is opened: Yes
Grill element - power: 1500 W
Other options: Eco light, Quick start

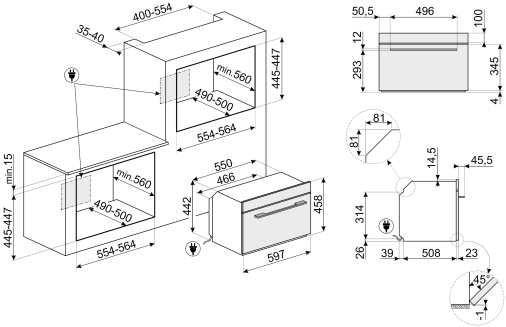

External Dimensions
- H 450 mm
- W 597 mm
- D 548 mm